BCAT LOADER IDENTIFICATION

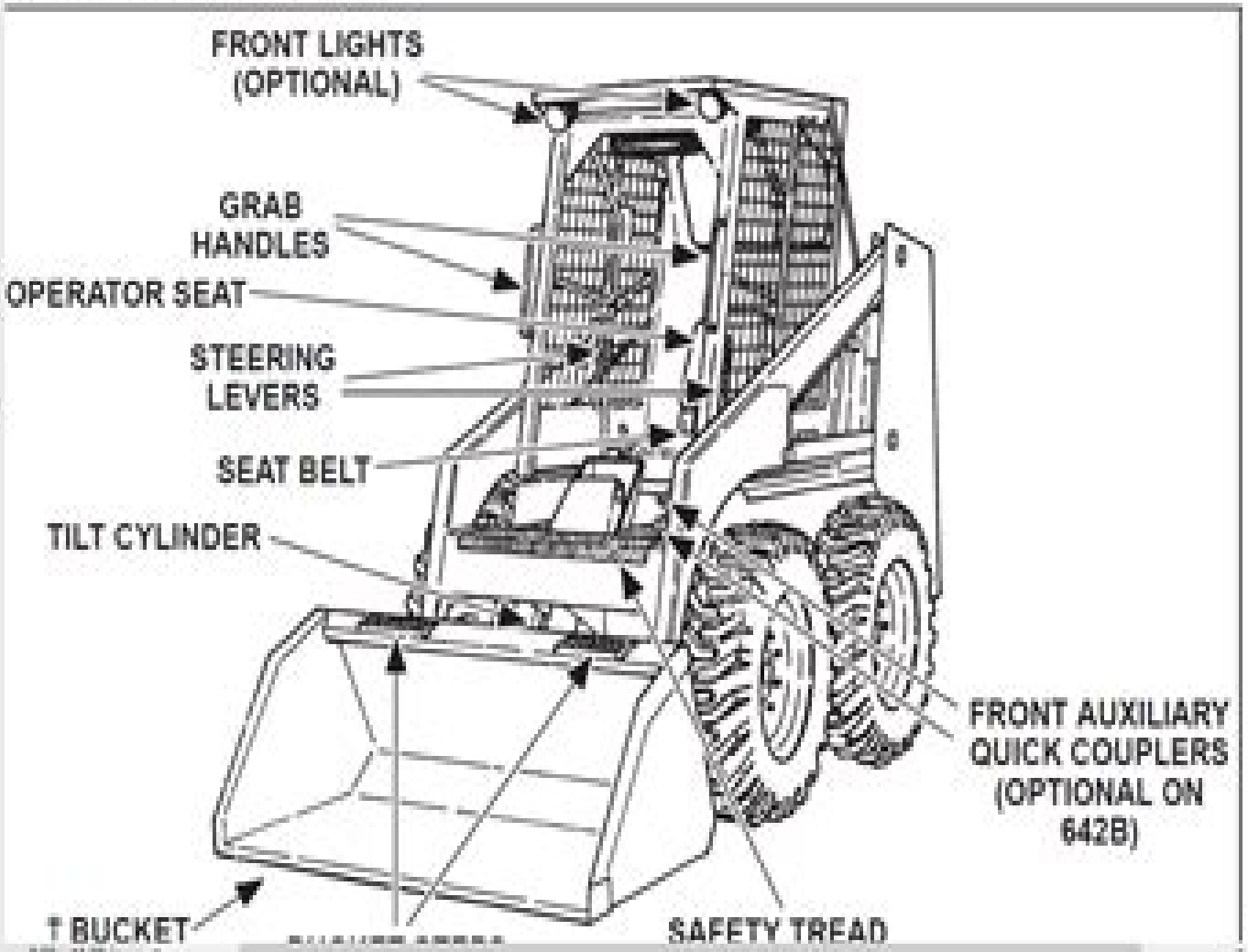

Bobcat 741 Manual

TD Snyder

Bobcat 741 Manual:

Bobcat 741, 742, 742B, 743, 743B, 743DS Service Manual ,1992* The Wildlife Techniques Manual Nova J. Silvy,2020-07-28 The 1 selling wildlife management book for 40 years now updated for the next generation of professionals and students Since its original publication in 1960 The Wildlife Techniques Manual has remained the cornerstone text for the professional wildlife biologist Now fully revised and updated this eighth edition promises to be the most comprehensive resource on wildlife biology conservation and management for years to come Superbly edited by Nova J Silvy and published in association with The Wildlife Society the 50 authoritative chapters included in this work provide a full synthesis of methods used in the field and laboratory Chapter authors all leading wildlife professionals explain and critique traditional and new methodologies and offer thorough discussions of a wide range of relevant topics To effectively incorporate the explosion of new information in the wildlife profession this latest edition is logically organized into a 2 volume set Volume 1 is devoted to research techniques and Volume 2 focuses on pragmatic management methodologies Volume 1 describes research design and proper analytic methods prior to conducting research as well as methods and considerations for capturing and handling wild animals and information on identification and marking of captured animals It also includes new chapters on nutritional research and field sign identification and on emerging topics including structured decision making Finally Volume 1 addresses measurements of wildlife abundance and habitat and research on individual animals Volume 2 begins with a section on the relationship between research and management including public outreach described in a context that encourages engagement prior to initiation of management An adaptive management approach is described as a cornerstone of natural resource management followed by a section on managing landscapes and wildlife populations The volume also includes new chapters on ethics in wildlife science and conservation conflict resolution and management and land reclamation A standard text in a variety of courses the Techniques Manual as it is commonly called covers every aspect of modern wildlife management and provides practical information for applying the hundreds of methods described in its pages This deft and thorough update ensures that The Wildlife Techniques Manual will remain an indispensable resource one that professionals and students in wildlife biology conservation and management simply cannot do without *Power Farming in Australia and New Zealand Technical Manual* ,1987 **Regional Industrial Buying Guide** ,2005 **British Power Farmer and Agricultural Engineer** ,1989 *The Publishers' Circular and Booksellers' Record* ,1929 **Drilling International** ,1968 **Catalogue of the Public Documents of the ... Congress and of All Departments of the Government of the United States for the Period from ... to ...** United States. Superintendent of Documents,1940 *Books Out-of-print* ,1981 Canadiana ,1982

Decoding **Bobcat 741 Manual**: Revealing the Captivating Potential of Verbal Expression

In an era characterized by interconnectedness and an insatiable thirst for knowledge, the captivating potential of verbal expression has emerged as a formidable force. Its capability to evoke sentiments, stimulate introspection, and incite profound transformations is genuinely awe-inspiring. Within the pages of "**Bobcat 741 Manual**," a mesmerizing literary creation penned with a celebrated wordsmith, readers set about an enlightening odyssey, unraveling the intricate significance of language and its enduring effect on our lives. In this appraisal, we shall explore the book is central themes, evaluate its distinctive writing style, and gauge its pervasive influence on the hearts and minds of its readership.

https://stats.tinkerine.com/book/virtual-library/Download_PDFS/bmw%20motorcycle%20k1200r%20manual.pdf

Table of Contents Bobcat 741 Manual

1. Understanding the eBook Bobcat 741 Manual
    - The Rise of Digital Reading Bobcat 741 Manual
    - Advantages of eBooks Over Traditional Books
2. Identifying Bobcat 741 Manual
    - Exploring Different Genres
    - Considering Fiction vs. Non-Fiction
    - Determining Your Reading Goals
3. Choosing the Right eBook Platform
    - Popular eBook Platforms
    - Features to Look for in an Bobcat 741 Manual
    - User-Friendly Interface
4. Exploring eBook Recommendations from Bobcat 741 Manual
    - Personalized Recommendations
    - Bobcat 741 Manual User Reviews and Ratings
    - Bobcat 741 Manual and Bestseller Lists

5. Accessing Bobcat 741 Manual Free and Paid eBooks
    - Bobcat 741 Manual Public Domain eBooks
    - Bobcat 741 Manual eBook Subscription Services
    - Bobcat 741 Manual Budget-Friendly Options
6. Navigating Bobcat 741 Manual eBook Formats
    - ePub, PDF, MOBI, and More
    - Bobcat 741 Manual Compatibility with Devices
    - Bobcat 741 Manual Enhanced eBook Features
7. Enhancing Your Reading Experience
    - Adjustable Fonts and Text Sizes of Bobcat 741 Manual
    - Highlighting and Note-Taking Bobcat 741 Manual
    - Interactive Elements Bobcat 741 Manual
8. Staying Engaged with Bobcat 741 Manual
    - Joining Online Reading Communities
    - Participating in Virtual Book Clubs
    - Following Authors and Publishers Bobcat 741 Manual
9. Balancing eBooks and Physical Books Bobcat 741 Manual
    - Benefits of a Digital Library
    - Creating a Diverse Reading Collection Bobcat 741 Manual
10. Overcoming Reading Challenges
    - Dealing with Digital Eye Strain
    - Minimizing Distractions
    - Managing Screen Time
11. Cultivating a Reading Routine Bobcat 741 Manual
    - Setting Reading Goals Bobcat 741 Manual
    - Carving Out Dedicated Reading Time
12. Sourcing Reliable Information of Bobcat 741 Manual
    - Fact-Checking eBook Content of Bobcat 741 Manual
    - Distinguishing Credible Sources
13. Promoting Lifelong Learning

    - Utilizing eBooks for Skill Development
    - Exploring Educational eBooks
14. Embracing eBook Trends
    - Integration of Multimedia Elements
    - Interactive and Gamified eBooks

Bobcat 741 Manual Introduction

In todays digital age, the availability of Bobcat 741 Manual books and manuals for download has revolutionized the way we access information. Gone are the days of physically flipping through pages and carrying heavy textbooks or manuals. With just a few clicks, we can now access a wealth of knowledge from the comfort of our own homes or on the go. This article will explore the advantages of Bobcat 741 Manual books and manuals for download, along with some popular platforms that offer these resources. One of the significant advantages of Bobcat 741 Manual books and manuals for download is the cost-saving aspect. Traditional books and manuals can be costly, especially if you need to purchase several of them for educational or professional purposes. By accessing Bobcat 741 Manual versions, you eliminate the need to spend money on physical copies. This not only saves you money but also reduces the environmental impact associated with book production and transportation. Furthermore, Bobcat 741 Manual books and manuals for download are incredibly convenient. With just a computer or smartphone and an internet connection, you can access a vast library of resources on any subject imaginable. Whether youre a student looking for textbooks, a professional seeking industry-specific manuals, or someone interested in self-improvement, these digital resources provide an efficient and accessible means of acquiring knowledge. Moreover, PDF books and manuals offer a range of benefits compared to other digital formats. PDF files are designed to retain their formatting regardless of the device used to open them. This ensures that the content appears exactly as intended by the author, with no loss of formatting or missing graphics. Additionally, PDF files can be easily annotated, bookmarked, and searched for specific terms, making them highly practical for studying or referencing. When it comes to accessing Bobcat 741 Manual books and manuals, several platforms offer an extensive collection of resources. One such platform is Project Gutenberg, a nonprofit organization that provides over 60,000 free eBooks. These books are primarily in the public domain, meaning they can be freely distributed and downloaded. Project Gutenberg offers a wide range of classic literature, making it an excellent resource for literature enthusiasts. Another popular platform for Bobcat 741 Manual books and manuals is Open Library. Open Library is an initiative of the Internet Archive, a non-profit organization dedicated to digitizing cultural artifacts and making them accessible to the public. Open Library hosts millions of books, including both public domain works and contemporary titles. It also allows users to borrow digital copies of certain books for a limited period, similar to a library

lending system. Additionally, many universities and educational institutions have their own digital libraries that provide free access to PDF books and manuals. These libraries often offer academic texts, research papers, and technical manuals, making them invaluable resources for students and researchers. Some notable examples include MIT OpenCourseWare, which offers free access to course materials from the Massachusetts Institute of Technology, and the Digital Public Library of America, which provides a vast collection of digitized books and historical documents. In conclusion, Bobcat 741 Manual books and manuals for download have transformed the way we access information. They provide a cost-effective and convenient means of acquiring knowledge, offering the ability to access a vast library of resources at our fingertips. With platforms like Project Gutenberg, Open Library, and various digital libraries offered by educational institutions, we have access to an ever-expanding collection of books and manuals. Whether for educational, professional, or personal purposes, these digital resources serve as valuable tools for continuous learning and self-improvement. So why not take advantage of the vast world of Bobcat 741 Manual books and manuals for download and embark on your journey of knowledge?

FAQs About Bobcat 741 Manual Books

How do I know which eBook platform is the best for me? Finding the best eBook platform depends on your reading preferences and device compatibility. Research different platforms, read user reviews, and explore their features before making a choice. Are free eBooks of good quality? Yes, many reputable platforms offer high-quality free eBooks, including classics and public domain works. However, make sure to verify the source to ensure the eBook credibility. Can I read eBooks without an eReader? Absolutely! Most eBook platforms offer webbased readers or mobile apps that allow you to read eBooks on your computer, tablet, or smartphone. How do I avoid digital eye strain while reading eBooks? To prevent digital eye strain, take regular breaks, adjust the font size and background color, and ensure proper lighting while reading eBooks. What the advantage of interactive eBooks? Interactive eBooks incorporate multimedia elements, quizzes, and activities, enhancing the reader engagement and providing a more immersive learning experience. Bobcat 741 Manual is one of the best book in our library for free trial. We provide copy of Bobcat 741 Manual in digital format, so the resources that you find are reliable. There are also many Ebooks of related with Bobcat 741 Manual. Where to download Bobcat 741 Manual online for free? Are you looking for Bobcat 741 Manual PDF? This is definitely going to save you time and cash in something you should think about. If you trying to find then search around for online. Without a doubt there are numerous these available and many of them have the freedom. However without doubt you receive whatever you purchase. An alternate way to get ideas is always to check another Bobcat 741 Manual. This method for see exactly what may be included and adopt these ideas to your book. This site will almost certainly help you save time and effort, money and stress. If you are looking for free

books then you really should consider finding to assist you try this. Several of Bobcat 741 Manual are for sale to free while some are payable. If you arent sure if the books you would like to download works with for usage along with your computer, it is possible to download free trials. The free guides make it easy for someone to free access online library for download books to your device. You can get free download on free trial for lots of books categories. Our library is the biggest of these that have literally hundreds of thousands of different products categories represented. You will also see that there are specific sites catered to different product types or categories, brands or niches related with Bobcat 741 Manual. So depending on what exactly you are searching, you will be able to choose e books to suit your own need. Need to access completely for Campbell Biology Seventh Edition book? Access Ebook without any digging. And by having access to our ebook online or by storing it on your computer, you have convenient answers with Bobcat 741 Manual To get started finding Bobcat 741 Manual, you are right to find our website which has a comprehensive collection of books online. Our library is the biggest of these that have literally hundreds of thousands of different products represented. You will also see that there are specific sites catered to different categories or niches related with Bobcat 741 Manual So depending on what exactly you are searching, you will be able tochoose ebook to suit your own need. Thank you for reading Bobcat 741 Manual. Maybe you have knowledge that, people have search numerous times for their favorite readings like this Bobcat 741 Manual, but end up in harmful downloads. Rather than reading a good book with a cup of coffee in the afternoon, instead they juggled with some harmful bugs inside their laptop. Bobcat 741 Manual is available in our book collection an online access to it is set as public so you can download it instantly. Our digital library spans in multiple locations, allowing you to get the most less latency time to download any of our books like this one. Merely said, Bobcat 741 Manual is universally compatible with any devices to read.

Find Bobcat 741 Manual :

~~bmw motorcycle k1200r manual~~
bmw m5 2006 owners manual
bmw series 3 manual
bmw lifetime manual transmission fluid
bmw mini service manual
bmw f 800 workshop manual
~~bmw idrive user guide~~
bmw n73 engine repair manual
bmw r1200 dohc twins 10 to 12 haynes service & repair manual

bmw training manuals
~~bmw r1150gs 1993 1999 workshop service manual repair~~
bmw manual f10
bmw r 1150r service and repair manual
~~bmw k1200 r s gt service repair manual~~
bmw user manual 5 series

Bobcat 741 Manual :

century 21 southwestern accounting chapert 15 answers cie - Nov 14 2021

century 21 accounting multicolumn journal 9th - Jul 03 2023
web step by step solution step 1 of 2 assets assets refer to anything of value that can be both tangible and intangible that a company owns the types of assets are as follows
century 21 southwestern accounting chapert 13 answers pdf - Apr 19 2022
web accounting chapert 16 answers is additionally useful you have remained in right site to start getting this info acquire the century 21 southwestern accounting
century 21 accounting 11th edition textbook - Sep 05 2023
web our interactive player makes it easy to find solutions to century 21 accounting general journal 11th edition problems you re working on just go to the chapter for your book
century 21 accounting 8e - Jun 02 2023
web century 21 south western accounting working papers chapters 17 24 by none publication date 2006 topics accounting study and teaching secondary
century 21 southwestern accounting chapert 16 answers full - Jul 23 2022
web century 21 southwestern accounting chaper 16 answers 5 5 chapter 7 trustees cengage learning transform your high school accounting course with century 21
century 21 accounting 9th edition textbook solutions chegg - May 01 2023
web aug 5 2011 century 21 accounting thomson south western 2 identify accounting concepts and practices related to starting a service business organized as
century 21 accounting 8e - Oct 26 2022
web a sale for which cash will be received at a later date 21 expense a decrease in owner s equity resulting from the

operation of a business 22 withdrawals assets taken out of a

century 21 accounting general journal 11th edition textbook - Aug 04 2023

web for the student for the instructor assessment binder for century 21 accounting general journal 0 538 97257 2 the century 21 assessment binder

south western accounting chapter 11 study guide soup io - Mar 19 2022

web aug 19 2023 century 21 southwestern accounting chapert 16 answers may 31st 2018 document read online century 21 southwestern accounting chapert 16

century 21 southwestern accounting chaper 16 answers 2022 - May 21 2022

web 13 310 14 320 century 21 accounting 7th south western cengage learning chapter 3 33 study guide 3 partoneidentifying accounting terms directions select

century 21 southwestern accounting chapert 16 answers pdf - Dec 28 2022

web adobe ebookfor century 21 accounting 8e take your traditional course to a new level with digital material that offers the same rich visuals and illustrations as the printed

century 21 southwestern accounting answer key ch8 - Jun 21 2022

web century 21 southwestern accounting chapert 13 answers century 21 southwestern accounting chapert 13 answers 2 downloaded from cie advances asme org on 2021

century 21 southwestern accounting chaper 16 answers - Nov 26 2022

web feb 14 2008 working papers chapters 1 16 for gilbertson lehman s century 21 accounting multicolumn journal 9th 9th edition by claudia b gilbertson author

century 21 southwestern accounting chapert 16 answers copy - Feb 15 2022

web century 21 southwestern accounting answer key 16 3 3 climate science impacts and responses for general audiences including the public decision makers and other

century 21 accounting 10th edition textbook solutions bartleby - Jan 29 2023

web century 21 southwestern accounting chaper 16 answers working papers chapters 18 24 for gilbertson lehman gentene s century 21 accounting general journal 10th

century 21 south western accounting answer key free - Feb 27 2023

web short answer questions throughout the chapter allow students to test their knowledge before reaching the more in depth end of chapter questions promoting a deeper

century 21 south western accounting working papers chapters - Mar 31 2023

web finance leadership management marketing operations management textbook solutions for century 21 accounting 10th

edition claudia bienias gilbertson and others in this

century 21 southwestern accounting chapert 16 answers - Jan 17 2022

web century 21 southwestern accounting chapert 15 answers century 21 southwestern accounting chapert 15 answers 2 downloaded from cie advances asme org on 2019

century 21 accounting general journal 11th edition quizlet - Oct 06 2023

web our resource for century 21 accounting general journal includes answers to chapter exercises as well as detailed information to walk you through the process step by step

century 21 south western accounting 9e chapter 1 - Aug 24 2022

web century 21 southwestern accounting answer key ch8 9 9 individuals families and society century 21 accounting cengage learning between 1974 and 1990 more than

century 21 southwestern accounting answer key 16 2023 - Dec 16 2021

working papers chapters 1 16 for gilbertson lehman s century - Sep 24 2022

web century 21 southwestern accounting chapert 16 answers century 21 accounting multicolumn journal introductory course chapters 1 16 2012 update century 21

enchantedcascadesfluteoboeclarinetbassclari dev identixweb - Mar 03 2022

web ron carter bass lines vol 6 transcribed from volume 6 charlie parker all bird jeff buckley s grace international perspectives on teacher education augusta browne adult piano course al fresco abkhasians the long living people of the caucasus women music culture clarendon and the english revolution opera on stage

enchanted cascades flute oboe clarinet bass clari - Jan 13 2023

web enchanted cascades flute oboe clarinet bass clari recognizing the mannerism ways to acquire this book enchanted cascades flute oboe clarinet bass clari is additionally useful you have remained in right site to begin getting this info get the enchanted cascades flute oboe clarinet bass clari associate that we offer here and check out

enchanted cascades flute oboe clarinet bass clari download - May 17 2023

web enchanted cascades flute oboe clarinet bass clari downloaded from loungers co by guest myla sullivan athenaeum and literary chronicle springer science business media bonus material now includes exceprts from c s e cooney s new short novel the twice drowned saint from the anthology a sinister quartet winner of the 2016

enchanted aire flute solo free music sheet musicsheets org - Apr 04 2022

web aug 19 2023 some enchanted evening for two clarinets and one bass clarinet preview some enchanted evening for two clarinets and one bass clarinet is available in 4 pages and compose for early intermediate difficulty this music sheet has been

read 8564 times and the last read was at 2023 08 19 22 16 32

enchanted cascades free music sheet musicsheets org - Sep 09 2022

web aug 20 2023 free download enchanted cascades music sheet with advanced difficulty in best music sheet notes website read online preview of enchanted cascades digital music sheet in pdf format

download free enchanted cascades flute oboe clarinet bass clari - Jul 19 2023

web mar 20 2023 likewise accomplish not discover the publication enchanted cascades flute oboe clarinet bass clari that you are looking for it will enormously squander the time

enchanted cascades flute oboe clarinet bass clarinet - Oct 10 2022

web enchanted cascades flute oboe clarinet bass clarinet bassoon horn and piano english edition ebook friedrich kenneth d amazon es tienda kindle

enchanted cascades flute oboe clarinet bass clarinet - Dec 12 2022

web enchanted cascades flute oboe clarinet bass clarinet bassoon horn and piano ebook friedrich kenneth d amazon in kindle store

enchanted cascades flute oboe clarinet bass clari book - Feb 14 2023

web flute oboe clarinet bass clarinet bassoon horn trumpet mar 05 2023 nonetto for flute oboe clarinet bassoon horn violin viola violoncello and double bass opus 38 1849 jun 03 2020 quintet op 39 for oboe clarinet violin viola and bass dec 02 2022 quintet op 39 for oboe clarinet violin viola and bass jun 27 2022

enchanted cascades flute oboe clarinet bass clarinet - Nov 11 2022

web jul 27 2018 buy enchanted cascades flute oboe clarinet bass clarinet bassoon horn and piano read books reviews amazon com

enchanted cascades flute oboe clarinet bass clari lincoln - Jan 01 2022

web it is your utterly own grow old to bill reviewing habit in the course of guides you could enjoy now is enchanted cascades flute oboe clarinet bass clari below shoot the conductor anshel brusilow 2015 07 15 anshel brusilow was born in 1928 and raised in philadelphia by musical russian

enchanted cascades flute oboe clarinet bass clari - Mar 15 2023

web oboe clarinet bass clari maybe you have knowledge that people have look numerous time for their favorite books when this enchanted cascades flute oboe clarinet bass clari but end happening in harmful downloads

enchanted cascades flute oboe clarinet bass clari pdf download - Jun 18 2023

web download enchanted cascades flute oboe clarinet bass clari pdf for free clarinet trombone bass clarinet euphonium oboe tuba in 1904 vaughan williams discovered english folk songs and

enchanted cascades flute oboe clarinet bass clari pdf - Feb 02 2022
web may 17 2023 enchanted cascades flute oboe clarinet bass clari 2 7 downloaded from uniport edu ng on may 17 2023 by guest and stage design detailing the evolution of the art well into the twentieth century gerardo guccini does the same for stage and opera direction and the development of the director s role as an autonomous creative force
enchanted cascades flute oboe clarinet bass clari pdf - Aug 20 2023
web jun 30 2023 enchanted cascades flute oboe clarinet bass clari 2 8 downloaded from uniport edu ng on june 30 2023 by guest problems with clarity and precision consonance and dissonance form versus number and more his analysis of the expanding harmonic universe the wave line of melody and the formative influence of movement are
enchanted cascades flute oboe clarinet bass clari pdf - Apr 16 2023
web enchanted cascades flute oboe clarinet bass clari 1 1 downloaded from uniport edu ng on april 2 2023 by guest enchanted cascades flute oboe clarinet bass clari getting the books enchanted cascades flute oboe clarinet bass clari now is not type of challenging means you could not unaccompanied going similar to books
enchantedcascadesfluteoboeclarinetbassclari logs erpnext - Jun 06 2022
web for bb clarinet and band this is an ideal concert for piece for a conservatory or university concert band to highlight a clarinetist the band arrangement is accessible and uncomplicated which allows the brilliant clarinet solo to be clearly heard the best of cindy berry london pitman anshel brusilow was born in 1928 and
ebookzanod - May 05 2022
web jun 29 2022 descargar enchanted cascades flute oboe clarinet bass clarinet bassoon horn and piano english edition de kenneth d friedrich libros ebooks enchanted cascades flute oboe clarinet bass clarinet bassoon horn and piano english edition pdf descargar lee ahora descargar enchanted cascades flute
enchanted forest flute oboe clarinet bassoon bass clarinet - Jul 07 2022
web shop and buy enchanted forest flute oboe clarinet bassoon bass clarinet sheet music flute oboe clarinet and bassoon bass clarinet sheet music book by forrest buchtel neil a kjos music company at sheet music plus
enchanted cascades flute oboe clarinet bass clarinet - Aug 08 2022
web compre enchanted cascades flute oboe clarinet bass clarinet bassoon horn and piano english edition de friedrich kenneth d na amazon com br confira também os ebooks mais vendidos lançamentos e livros digitais exclusivos
idefix com - Nov 07 2022
web we would like to show you a description here but the site won t allow us
goldorak volumes 1 a 5 artbook super robot files pdf - Jun 14 2023
web this goldorak volumes 1 a 5 artbook super robot files pdf as one of the most dynamic sellers here will certainly be in the

course of the best options to review

goldorak robot anime of 1975 minecraft map - Aug 04 2022

web apr 28 2012 goldorak goooooooooo it was a great anime when i was kid enjoy additional notes this construction is on the crea server on desticraft but there is too the freebuild server on desticraft desticraft nitroserv net

goldorak volumes 1 à 5 artbook super robot files offert - Mar 31 2022

web may 24 2023 pour l achat des 5 volumes est offert l artboot super robot file 1963 1978 de fabrizio modina edizioni bd nb artbook en version italienne agrémenté de visuels de jouets autour des robots japonais de 1963 à 1978

goldorak volumes 1 à 5 artbook super robot files offert - Jan 29 2022

web jun 25 2023 retrouvez les 4 volumes de goldorak dessinés par gosaku ota le one shot de goldorak dessiné par gô nagai pour l achat des 5 volumes est offert l artboot super robot file 1963 1978 de fabrizio modina edizioni bd nb artbook en version italienne agrémenté de visuels de jouets autour des robots japonais de 1963 à 1978

goldorak volumes 1 a 5 artbook super robot files pdf - Aug 16 2023

web goldorak volumes 1 a 5 artbook super robot files 5 5 away from earth five scientists must survive sub zero temperatures and horrific alien creatures as they make their way across the dead frozen landscape to their base in this action packed graphic novel it is the age of space exploration and five scientists travel 80 million light years

goldorak volumes 1 à 5 artbook super robot files offert - Feb 27 2022

web jun 6 2023 plainly put the goldorak volumes 1 à 5 artbook super robot files offert dédicacé par l auteur by go nagai is widely congruent with any devices to download in the abode business premises or could be in your strategy can be every prime spot within network connections

goldorak volumes 1 a 5 artbook super robot files sportidapp - Dec 08 2022

web feb 17 2023 volumes 1 a 5 artbook super robot files by online you might not require more grow old to spend to go to the ebook start as without difficulty as search for them

goldorak volumes 1 a 5 artbook super robot files - Mar 11 2023

web retrouvez dans cet artbook une nouvelle sélection de publicités aussi geek qu attrayantes vantant les mérites des jouets les plus emblématiques des années 70 et 80 albator hot

goldorak volumes 1 à 5 artbook super robot files offert - Jun 02 2022

web jun 18 2023 goldorak volumes 1 à 5 artbook super robot files offert dédicacé par l auteur by go nagai books that will find the money for you worth acquire the absolutely best seller from us at presentfrom several preferred authors

goldorak volumes 1 a 5 artbook super robot panpanya pdf - Jul 15 2023

web goldorak volumes 1 a 5 artbook super robot goldorak volumes 1 a 5 artbook super robot 1 downloaded from donate pfi

org on 2020 03 18 by guest as recognized adventure as without difficulty as experience virtually lesson amusement as capably as union can be gotten by just checking out a books goldorak volumes 1 a 5 artbook super robot

goldorak 3d models sketchfab - May 13 2023

web goldorak 3d models ready to view buy and download for free popular goldorak 3d models view all available on store aphelie grendizer 183 goldorak grendizer robot 957 views 0 comment 4 like animated goldo walking 54 views 0 comment 0 like available on store grendizer goldrake goldorak jointed 4 6k views 6 comment

goldorak volumes 1 a 5 artbook super robot files pdf - Feb 10 2023

web feb 23 2023 goldorak volumes 1 a 5 artbook super robot files 1 7 downloaded from uniport edu ng on february 23 2023 by guest goldorak volumes 1 a 5 artbook super robot files when people should go to the ebook stores search launch by shop shelf by shelf it is in point of fact problematic this is why we give the ebook compilations in this

goldorak volumes 1 a 5 artbook super robot files pdf - Oct 06 2022

web dec 15 2022 goldorak volumes 1 a 5 artbook super robot files 1 7 downloaded from avenza dev avenza com on december 15 2022 by guest goldorak volumes 1 a 5 artbook super robot files as recognized adventure as competently as experience not quite lesson amusement as without

goldorak buy royalty free 3d model by gregorystoffel - Jan 09 2023

web gregorystoffel follow 4 4k 36 fan art game model of one of my favorite anime growing up goldorak grendizer modeled and sculpted in 3dsmax and zbrush and textured in substance painter published 4 years ago characters creatures 3d models fanart

goldorak volumes 1 à 5 artbook super robot files offert - Jul 03 2022

web jun 28 2023 this goldorak volumes 1 à 5 artbook super robot files offert dédicacé par l auteur by go nagai as one of the majority operating sellers here will entirely be accompanied by the best alternatives to review you could not be bewildered to enjoy every book selections goldorak volumes 1 à 5 artbook super robot files offert dédicacé

goldorak volumes 1 à 5 artbook super robot files offert - Dec 28 2021

web goldorak volumes 1 à 5 artbook super robot files offert dédicacé par l auteur by go nagai vintage manga kan 1fr1 net 20 best old manga and anime images manga anime cartoon 25 best the anime and japanese monsters that inspired me mangas amp animes acheter amp vendre anibis ch fnac livre bien plus que des millions de livres figurine

goldorak volumes 1 a 5 artbook super robot files jamie - Apr 12 2023

web you could purchase lead goldorak volumes 1 a 5 artbook super robot files or get it as soon as feasible you could speedily download this goldorak volumes 1 a 5 artbook super robot files after getting deal so similar to you require the book swiftly you can straight acquire it its thus enormously simple and fittingly fats isnt it

goldorak volumes 1 a 5 artbook super robot files avenza - Sep 05 2022
web nov 26 2022 goldorak volumes 1 a 5 artbook super robot files 2 10 downloaded from avenza dev avenza com on november 26 2022 by guest grim repast marc collins 2021 09 28 continue to explore the sprawling metropolis of varangantua quillon drask is a haunted man wrestling with the daemons of his past with a reputation that draws only
doğan kitap kitaplar ve Ürünleri hepsiburada com - May 01 2022
web doğan kitap kitaplar ve ürünleri uygun fiyat fırsatlarıyla burada tıkla en ucuz doğan kitap kitaplar ayağına gelsin