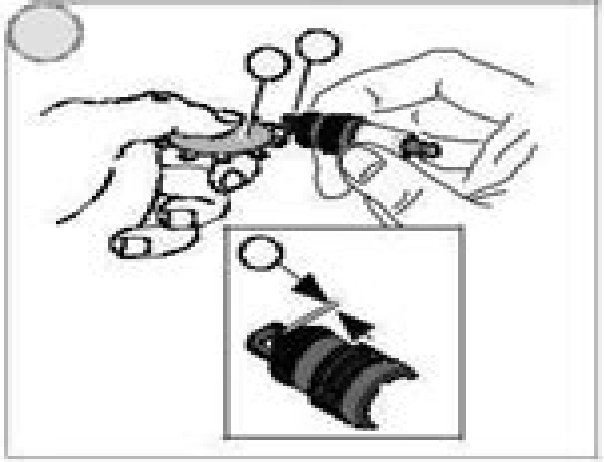

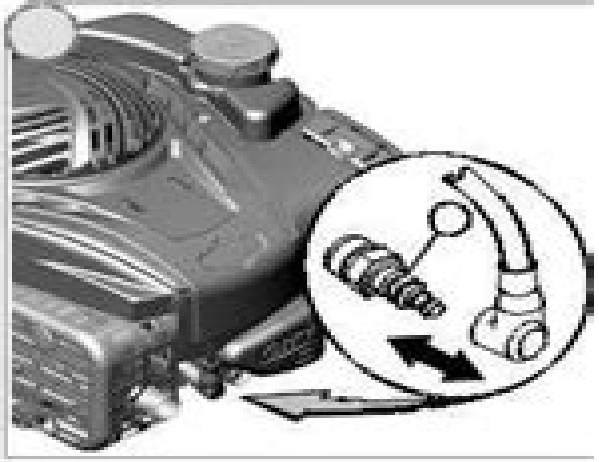

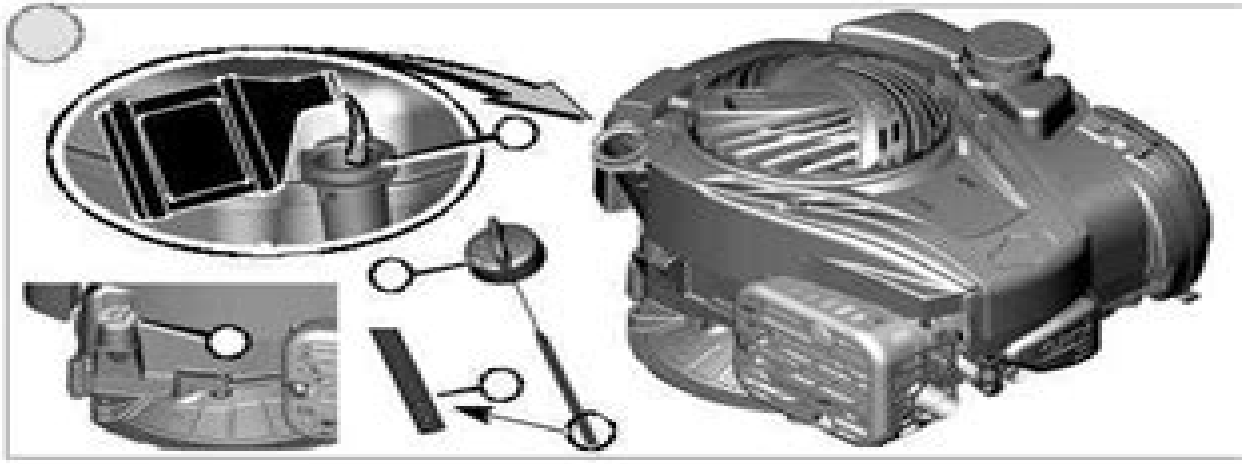

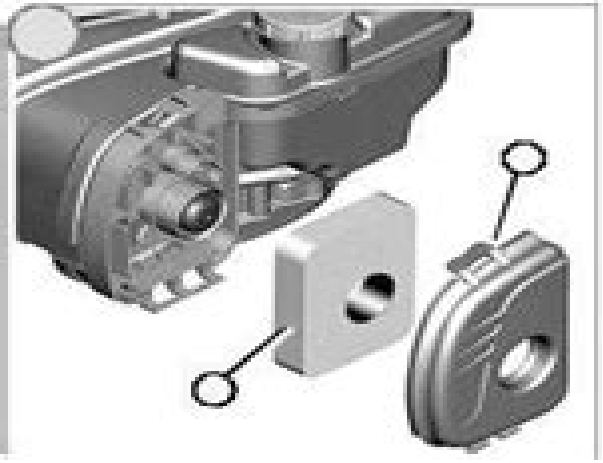

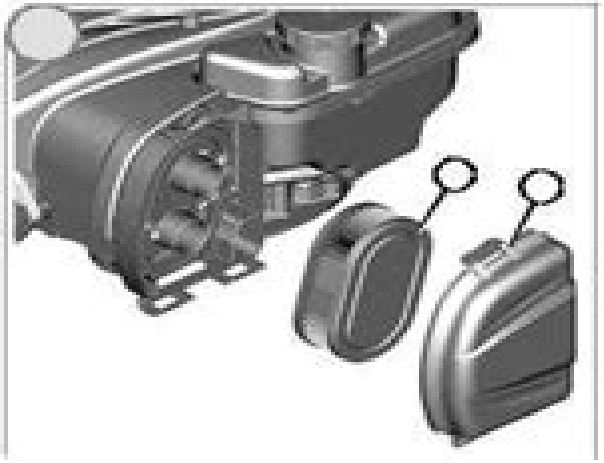

Briggs And Stratton 450 Series Repair Manual

Yijin Wang

Briggs And Stratton 450 Series Repair Manual:

Technical Manual United States. War Department,1945 *Operator, Organizational, Direct Support, and General Support Maintenance Manual Including Repair Parts List for Grinding Kit, Valve Seat (K O Lee Co, Inc) (4910-00-060-9983).* ,1989 Popular Mechanics ,1983-03 Popular Mechanics inspires instructs and influences readers to help them master the modern world Whether it s practical DIY home improvement tips gadgets and digital technology information on the newest cars or the latest breakthroughs in science PM is the ultimate guide to our high tech lifestyle *Popular Mechanics* ,1983-08 Popular Mechanics inspires instructs and influences readers to help them master the modern world Whether it s practical DIY home improvement tips gadgets and digital technology information on the newest cars or the latest breakthroughs in science PM is the ultimate guide to our high tech lifestyle **Popular Mechanics** ,1984-06 Popular Mechanics inspires instructs and influences readers to help them master the modern world Whether it s practical DIY home improvement tips gadgets and digital technology information on the newest cars or the latest breakthroughs in science PM is the ultimate guide to our high tech lifestyle Popular Mechanics ,1984-08 Popular Mechanics inspires instructs and influences readers to help them master the modern world Whether it s practical DIY home improvement tips gadgets and digital technology information on the newest cars or the latest breakthroughs in science PM is the ultimate guide to our high tech lifestyle **Popular Mechanics** ,1982-11 Popular Mechanics inspires instructs and influences readers to help them master the modern world Whether it s practical DIY home improvement tips gadgets and digital technology information on the newest cars or the latest breakthroughs in science PM is the ultimate guide to our high tech lifestyle *Popular Mechanics* ,1983-10 Popular Mechanics inspires instructs and influences readers to help them master the modern world Whether it s practical DIY home improvement tips gadgets and digital technology information on the newest cars or the latest breakthroughs in science PM is the ultimate guide to our high tech lifestyle Popular Mechanics ,1984-04 Popular Mechanics inspires instructs and influences readers to help them master the modern world Whether it s practical DIY home improvement tips gadgets and digital technology information on the newest cars or the latest breakthroughs in science PM is the ultimate guide to our high tech lifestyle **Popular Mechanics** ,1984-05 Popular Mechanics inspires instructs and influences readers to help them master the modern world Whether it s practical DIY home improvement tips gadgets and digital technology information on the newest cars or the latest breakthroughs in science PM is the ultimate guide to our high tech lifestyle

Unveiling the Magic of Words: A Overview of "**Briggs And Stratton 450 Series Repair Manual**"

In some sort of defined by information and interconnectivity, the enchanting power of words has acquired unparalleled significance. Their capability to kindle emotions, provoke contemplation, and ignite transformative change is actually awe-inspiring. Enter the realm of "**Briggs And Stratton 450 Series Repair Manual**," a mesmerizing literary masterpiece penned by a distinguished author, guiding readers on a profound journey to unravel the secrets and potential hidden within every word. In this critique, we shall delve to the book is central themes, examine its distinctive writing style, and assess its profound impact on the souls of its readers.

https://stats.tinkerine.com/public/virtual-library/Download_PDFS/bentley_publisher_repair_manual_audi_a6_free.pdf

Table of Contents Briggs And Stratton 450 Series Repair Manual

1. Understanding the eBook Briggs And Stratton 450 Series Repair Manual
    - The Rise of Digital Reading Briggs And Stratton 450 Series Repair Manual
    - Advantages of eBooks Over Traditional Books
2. Identifying Briggs And Stratton 450 Series Repair Manual
    - Exploring Different Genres
    - Considering Fiction vs. Non-Fiction
    - Determining Your Reading Goals
3. Choosing the Right eBook Platform
    - Popular eBook Platforms
    - Features to Look for in an Briggs And Stratton 450 Series Repair Manual
    - User-Friendly Interface
4. Exploring eBook Recommendations from Briggs And Stratton 450 Series Repair Manual
    - Personalized Recommendations
    - Briggs And Stratton 450 Series Repair Manual User Reviews and Ratings
    - Briggs And Stratton 450 Series Repair Manual and Bestseller Lists

5. Accessing Briggs And Stratton 450 Series Repair Manual Free and Paid eBooks
    - Briggs And Stratton 450 Series Repair Manual Public Domain eBooks
    - Briggs And Stratton 450 Series Repair Manual eBook Subscription Services
    - Briggs And Stratton 450 Series Repair Manual Budget-Friendly Options
6. Navigating Briggs And Stratton 450 Series Repair Manual eBook Formats
    - ePub, PDF, MOBI, and More
    - Briggs And Stratton 450 Series Repair Manual Compatibility with Devices
    - Briggs And Stratton 450 Series Repair Manual Enhanced eBook Features
7. Enhancing Your Reading Experience
    - Adjustable Fonts and Text Sizes of Briggs And Stratton 450 Series Repair Manual
    - Highlighting and Note-Taking Briggs And Stratton 450 Series Repair Manual
    - Interactive Elements Briggs And Stratton 450 Series Repair Manual
8. Staying Engaged with Briggs And Stratton 450 Series Repair Manual
    - Joining Online Reading Communities
    - Participating in Virtual Book Clubs
    - Following Authors and Publishers Briggs And Stratton 450 Series Repair Manual
9. Balancing eBooks and Physical Books Briggs And Stratton 450 Series Repair Manual
    - Benefits of a Digital Library
    - Creating a Diverse Reading Collection Briggs And Stratton 450 Series Repair Manual
10. Overcoming Reading Challenges
    - Dealing with Digital Eye Strain
    - Minimizing Distractions
    - Managing Screen Time
11. Cultivating a Reading Routine Briggs And Stratton 450 Series Repair Manual
    - Setting Reading Goals Briggs And Stratton 450 Series Repair Manual
    - Carving Out Dedicated Reading Time
12. Sourcing Reliable Information of Briggs And Stratton 450 Series Repair Manual
    - Fact-Checking eBook Content of Briggs And Stratton 450 Series Repair Manual
    - Distinguishing Credible Sources
13. Promoting Lifelong Learning

- Utilizing eBooks for Skill Development
- Exploring Educational eBooks

14. Embracing eBook Trends
    - Integration of Multimedia Elements
    - Interactive and Gamified eBooks

Briggs And Stratton 450 Series Repair Manual Introduction

Briggs And Stratton 450 Series Repair Manual Offers over 60,000 free eBooks, including many classics that are in the public domain. Open Library: Provides access to over 1 million free eBooks, including classic literature and contemporary works. Briggs And Stratton 450 Series Repair Manual Offers a vast collection of books, some of which are available for free as PDF downloads, particularly older books in the public domain. Briggs And Stratton 450 Series Repair Manual : This website hosts a vast collection of scientific articles, books, and textbooks. While it operates in a legal gray area due to copyright issues, its a popular resource for finding various publications. Internet Archive for Briggs And Stratton 450 Series Repair Manual : Has an extensive collection of digital content, including books, articles, videos, and more. It has a massive library of free downloadable books. Free-eBooks Briggs And Stratton 450 Series Repair Manual Offers a diverse range of free eBooks across various genres. Briggs And Stratton 450 Series Repair Manual Focuses mainly on educational books, textbooks, and business books. It offers free PDF downloads for educational purposes. Briggs And Stratton 450 Series Repair Manual Provides a large selection of free eBooks in different genres, which are available for download in various formats, including PDF. Finding specific Briggs And Stratton 450 Series Repair Manual, especially related to Briggs And Stratton 450 Series Repair Manual, might be challenging as theyre often artistic creations rather than practical blueprints. However, you can explore the following steps to search for or create your own Online Searches: Look for websites, forums, or blogs dedicated to Briggs And Stratton 450 Series Repair Manual, Sometimes enthusiasts share their designs or concepts in PDF format. Books and Magazines Some Briggs And Stratton 450 Series Repair Manual books or magazines might include. Look for these in online stores or libraries. Remember that while Briggs And Stratton 450 Series Repair Manual, sharing copyrighted material without permission is not legal. Always ensure youre either creating your own or obtaining them from legitimate sources that allow sharing and downloading. Library Check if your local library offers eBook lending services. Many libraries have digital catalogs where you can borrow Briggs And Stratton 450 Series Repair Manual eBooks for free, including popular titles.Online Retailers: Websites like Amazon, Google Books, or Apple Books often sell eBooks. Sometimes, authors or publishers offer promotions or free periods for certain books.Authors Website Occasionally, authors provide excerpts or short stories for free on their websites. While this might not be the Briggs And Stratton 450 Series Repair Manual full book , it can

give you a taste of the authors writing style.Subscription Services Platforms like Kindle Unlimited or Scribd offer subscription-based access to a wide range of Briggs And Stratton 450 Series Repair Manual eBooks, including some popular titles.

FAQs About Briggs And Stratton 450 Series Repair Manual Books

1. Where can I buy Briggs And Stratton 450 Series Repair Manual books? Bookstores: Physical bookstores like Barnes & Noble, Waterstones, and independent local stores. Online Retailers: Amazon, Book Depository, and various online bookstores offer a wide range of books in physical and digital formats.
2. What are the different book formats available? Hardcover: Sturdy and durable, usually more expensive. Paperback: Cheaper, lighter, and more portable than hardcovers. E-books: Digital books available for e-readers like Kindle or software like Apple Books, Kindle, and Google Play Books.
3. How do I choose a Briggs And Stratton 450 Series Repair Manual book to read? Genres: Consider the genre you enjoy (fiction, non-fiction, mystery, sci-fi, etc.). Recommendations: Ask friends, join book clubs, or explore online reviews and recommendations. Author: If you like a particular author, you might enjoy more of their work.
4. How do I take care of Briggs And Stratton 450 Series Repair Manual books? Storage: Keep them away from direct sunlight and in a dry environment. Handling: Avoid folding pages, use bookmarks, and handle them with clean hands. Cleaning: Gently dust the covers and pages occasionally.
5. Can I borrow books without buying them? Public Libraries: Local libraries offer a wide range of books for borrowing. Book Swaps: Community book exchanges or online platforms where people exchange books.
6. How can I track my reading progress or manage my book collection? Book Tracking Apps: Goodreads, LibraryThing, and Book Catalogue are popular apps for tracking your reading progress and managing book collections. Spreadsheets: You can create your own spreadsheet to track books read, ratings, and other details.
7. What are Briggs And Stratton 450 Series Repair Manual audiobooks, and where can I find them? Audiobooks: Audio recordings of books, perfect for listening while commuting or multitasking. Platforms: Audible, LibriVox, and Google Play Books offer a wide selection of audiobooks.
8. How do I support authors or the book industry? Buy Books: Purchase books from authors or independent bookstores. Reviews: Leave reviews on platforms like Goodreads or Amazon. Promotion: Share your favorite books on social media or recommend them to friends.

9. Are there book clubs or reading communities I can join? Local Clubs: Check for local book clubs in libraries or community centers. Online Communities: Platforms like Goodreads have virtual book clubs and discussion groups.
10. Can I read Briggs And Stratton 450 Series Repair Manual books for free? Public Domain Books: Many classic books are available for free as theyre in the public domain. Free E-books: Some websites offer free e-books legally, like Project Gutenberg or Open Library.

Find Briggs And Stratton 450 Series Repair Manual :

bentley publisher repair manual audi a6 free
berlin 2016 lichter einer stadt
benelli m2 field manual
berlingo transmission manual
ber faradays kraftlinien l boltzmann
bennie blousuisie vind n vriend afrikaans edition
beowulf traduction commentaire suivi sellic
bendix king autopilot manual kfc 325
bending emt conduit chart
below the convergence voyages toward antarctica 1699 1839
beneath a harvest sky desert roses book 3
ber die aneurysmen hirnarterien lebert
beninca user manual in ro
bentley continental s3 workshop manual
bergeys manual 9th edition citation

Briggs And Stratton 450 Series Repair Manual :

alice in wonderland wiki fandom - Nov 20 2022
alice in wonderland wiki is a database about alice in wonderland that anyone can edit watch the 2010 disney tim burton movie trailer search johnny depp characters cast and quotes alice in wonderland wiki
alice s adventures in wonderland character list sparknotes - Feb 09 2022
a list of all the characters in alice s adventures in wonderland alice s adventures in wonderland characters include alice the

cheshire cat the queen of hearts

alice s adventures in wonderland study guide sparknotes - Sep 18 2022

alice in wonderland is a novel by lewis carroll that was first published in 1865 lewis carroll was the pen name of charles dodgson who was a mathematician and logician at christ church oxford alice in wonderland and its sequel through the looking glass 1871 pokes fun at the vaunted rationality of the educated victorian elite throughout the story

alice in wonderland 2010 disney movies - Feb 21 2023

mar 5 2010 action adventure drama family fantasy live action tumble down the rabbit hole with alice for a fantastical new adventure in an imaginative new twist on one of the most beloved stories of all time

alice s adventures in wonderland wikipedia - Aug 30 2023

publisher macmillan publication date november 1865 followed by through the looking glass text alice s adventures in wonderland at wikisource alice s adventures in wonderland commonly alice in wonderland is an 1865 english children s novel by lewis carroll a mathematics don at oxford university

alice s adventures in wonderland summary characters facts - May 27 2023

alice s adventures in wonderland summary characters facts britannica login subscribe home games quizzes history society science tech biographies animals nature geography travel arts culture money videos

alice in wonderland 2010 imdb - Sep 30 2023

mar 5 2010 alice in wonderland 2010 pg 1h 48m imdb rating 6 4 10 433k your rating rate popularity 624 62 play trailer 0 32 31 videos 99 photos adventure family fantasy

alice in wonderland 2010 full cast crew imdb - Mar 13 2022

stunt double alice tania l pearson stunts red queen female townspeople as tania pearson loeser heather philips stunt double alice uk ernie reyes jr stunt double tweedledee david schultz utility stunts as dave schultz paul anthony scott

watch alice in wonderland 2010 prime video amazon com - Aug 18 2022

alice falls into a magical world with strange characters 12 264 imdb 6 4 1 h 48 min 2010 x ray pg science fiction kids dark thrilling

alis harikalar diyarında alice in wonderland beyazperde com - Apr 13 2022

mar 5 2010 fragman Özet artık kansas ta değiliz repliğini bir de tim burton ın algısıyla beyazperde de izlemek isteyen sinemaseverlere özel bir yapım karşımızda alice harikalar diyarı nın bu burton yorumunda güçlü kız imajı öne çıkarıldı linda woolverton ın ço

alice disney wiki fandom - Oct 20 2022

alice is a featured article which means it has been identified as one of the best articles produced by the disney wiki

community if you see a way this page can be updated or improved without compromising previous work please feel free to contribute this article is

alice harikalar diyarında vikipedi - Jan 23 2023

İngiliz kütüphanesindeki 1864 tarihli alice s adventures under ground un orijinal el yazmasından bir sayfa yayınlanışı İsim değişikliği 1864 tarihli ilk el yazması alice s adventures under ground alice in yeraltı maceraları adını taşır dodgson arkadaşları tarafından el yazmasını yayınlamaya teşvik edildiğinde

alice in wonderland rotten tomatoes - Dec 22 2022

a young girl when she first visited magical underland alice kingsleigh mia wasikowska is now a teenager with no memory of the place except in her dreams her life takes a turn for the

alis harikalar diyarında film 2010 vikipedi - Jun 27 2023

wasikowska on dokuz yaşındaki alis karakterini canlandırmaktadır alis e beyaz kraliçe yi tahtına geri getirmeyi sağlayacak kişi olduğu söylenir çünkü kırmızı kraliçe tarafından kontrol edilen underland yeraltı sakinlerine terör estirmekte olan jabberwocky adındaki ejderha benzeri yaratığı öldürebilecek tek kişidir

alice in wonderland the different versions imdb - Jun 15 2022

film alice s adventures in wonderland based on the novel alice s adventures in wonderland by lewis carroll director edwin s porter stars gladys hulette yale boss votes 155

alice alice harikalar diyarında vikipedi - Apr 25 2023

alice kültürel bir simge olarak tanımlanmaktadır

alice in wonderland 2010 film wikipedia - Jul 29 2023

the cheshire cat uses his shapeshifting powers to free the mad hatter who incites rebellion amongst the red queen s subjects meanwhile absolem who is turning into a pupa finally gets alice to remember that she visited underland when she was a little girl and called it

alice alice s adventures in wonderland wikipedia - Mar 25 2023

development one of carroll s drawings of alice from alice s adventures under ground alice debuted in carroll s first draft of alice s adventures in wonderland alice s adventures under ground 19

alice alice in wonderland wiki fandom - May 15 2022

alice sign in to edit curiouser curiouser alice alice is the main character from the original books alice s adventures in wonderland and its satisfying sequel through the looking glass and what alice found there by lewis carroll she is also prominent in most expansions of the wonderland myths

alice in wonderland new official full trailer hq youtube - Jul 17 2022

dec 15 2009 disney uk 7 66m subscribers subscribe subscribed 1 2 3 4 5 6 7 8 9 0 1 2 3 4 5 6 7 8 9 0 1 2 3 4 5 6 7 8 9 1 2 3 4

anne frank the diary of a young girl black and white c - Mar 30 2022

web anne frank s the diary of a young girl is an inspiring and tragic account of an ordinary life lived in extraordinary circumstances that has enthralled readers for generations this penguin classics edition is edited by otto h frank and mirjam pressler translated by susan massotty and includes an introduction by elie wiesel author of night june

the diary of a young girl wikipedia - Jun 13 2023

web the diary of a young girl often referred to as the diary of anne frank is a book of the writings from the dutch language diary kept by anne frank while she was in hiding for two years with her family during the nazi occupation of the netherlands

anne frank the diary of a young girl english - Apr 11 2023

web anne frank the diary of a young girl english 12 95 add to cart this is the english edition of the diary other languages are available under diary anne frank keeps her diary from 12 june 1942 to 1 august 1944 in the over two years of her being in hiding she fills a number of notebooks

the diary of a young girl by cherry gilchrist open library - Aug 03 2022

web mar 16 2023 the diary of a young girl by cherry gilchrist and anne frank 2 00 3 ratings 72 want to read 5 currently reading 3 have read this edition doesn t have a description yet can you add one publish date 1999 publisher pearson education pearson education international language english pages 57 subjects

the diary of a young girl the definitive edition - Dec 07 2022

web mar 24 2021 discovered in the attic in which she spent the last years of her life anne frank s remarkable diary a powerful reminder of the horrors of war and an eloquent testament to the human spirit has since become a world classic beloved by

woman arrested after death of girl two found in hampshire pond - Dec 27 2021

web sep 11 2023 pa media mon 11 sep 2023 16 10 edt a woman has been arrested on suspicion of murder following the death of a two year old girl who was found unresponsive in a village pond police were called

anne frank the diary of a young girl archive org - Jul 14 2023

web jun 5 2016 anne frank the diary of a young girl topics anne frank the diary of a young girl collection opensource language english anne frank the diary of a young girl addeddate

the diary of a young girl the definitive edition frank anne - Sep 04 2022

web the diary of a young girl stands without peer for both young readers and adults it continues to bring to life this young woman who for a time survived the worst horror the modern world had seen and who remained triumphantly and

heartbreakingly human throughout her ordeal

the diary of a young girl fingerprint amazon in - Apr 30 2022

web the diary of a young girl fingerprint anne frank amazon in books books history world buy new 119 00 m r p 199 00 save 80 00 40 inclusive of all taxes fulfilled free delivery sunday 10 september on orders dispatched by amazon over 499 details or fastest delivery tomorrow 9 september order within 1 hr 12 mins

the diary of a young girl penguin random house higher - Nov 06 2022

web the diary of a young girl the definitive edition author anne frank edited by otto m frank mirjam pressler translated by susan massotty add to wish list mass market paperback 7 99 us bantam dell bantam on sale feb 03 1997 400 pages 978 0 553 57712 9 see additional formats

anne frank the diary of a young girl archive org - Aug 15 2023

web a timely story rediscovered by each new generation the diary of a young girl stands without peer for both young readers and adults it continues to bring to life this young woman who for a time survived the worst horror of the modern world had seen and who remained triumphantly and heartbreakingly human throughout her ordeal

the diary of a young girl the definitive edition amazon com - Jun 01 2022

web jan 1 1995 the diary of a young girl the definitive edition frank anne amazon com books books history military buy new 11 14 3 99 delivery april 26 may 1 details or fastest delivery april 25 28 details select delivery location in stock usually ships within 3 to 4 days qty 1 add to cart buy now payment secure

the diary of a young girl definitive edition amazon com tr - Oct 05 2022

web first published over sixty years ago anne frank s diary of a young girl has reached millions of young people throughout the world in july 1942 thirteen year old anne frank and her family fleeing the occupation went into hiding in an amsterdam warehouse

loading interface goodreads - Feb 26 2022

web discover and share books you love on goodreads

the diary of a young girl anne frank google books - May 12 2023

web sep 15 2010 the definitive edition discovered in the attic in which she spent the last years of her life the remarkable diary that has become a world classic a powerful reminder of the horrors of war

the diary of a young girl the definitive edition of the world s - Jan 08 2023

web one of the most famous accounts of living under the nazi regime comes from the diary of a thirteen year old jewish girl anne frank edited by her father otto h frank and german novelist mirjam pressler this is a true story to be rediscovered by each new generation 12th july 1944

the diary of a young girl by anne frank goodreads - Jul 02 2022
web the diary of a young girl also known as the diary of anne frank is a book of the writings from the dutch language diary kept by anne frank while she was in hiding for two years with her family during the nazi occupation of the netherlands
air force 1 x tiffany co nike - Jan 28 2022
web □ □ □□ □□□□□ □ air force 1 x tiffany co 1837 □□ □□□ □ □□□□□□□ □□ □□□□□□□□□□□□□□ □□□□ □□□□□ □ □□□□ □ □□ □□ □□□□□
the diary of a young girl by anne frank open library - Feb 09 2023
web jan 15 2023 anne frank s world famous diary chans two years of her life from 1942 to 1944 when her family were hiding in amsterdam life from german nazis the diary begins just before the family retreated into their secret annexe anne frank recorded mostly her hopes frustrations clashes with her parents and observation of her companions
the diary of a young girl penguin random house - Mar 10 2023
web about the diary of a young girl the definitive edition discovered in the attic in which she spent the last years of her life the remarkable diary that has become a world classic a powerful reminder of the horrors of war and
compathy wordreference com dictionary of english - Dec 07 2022
web compathy wordreference english dictionary questions discussion and forums all free
compathy Định nghĩa trong từ điển tiếng anh cambridge - Jan 28 2022
web compathy noun u uk ˈkɒm pə θi us ˈkɑːm pə θi the sharing of another person s feelings such as happiness sadness or pain to have empathy is to be able to put yourself in another s shoes whereas to have compathy is to feel their emotions as if you share the same heart thêm các ví dụ
compathy the contagion of physical distress pubmed - Nov 06 2022
web a qualitative study examining the nurse patient relationship has identified the contagion of physical distress or compathy as a significant but otherwise neglected phenomenon compathy occurs when one person observes another person suffering a disease or injury and experiences in one s physical body a similar or related distress
findings compathy method - Oct 05 2022
web research findings the following findings have been derived using mixed methods from 73 simulations and 238 questionnaires with three research groups comprising 90 participants for statistical integrity participants split into three groups a simulation group a non simulation group and a control group
sympathy vs compathy what s the difference wikidiff - Sep 04 2022
web noun sympathies a feeling of pity or sorrow for the suffering or distress of another compassion the ability to share the feelings of another a mutual relationship between people or things such that they are correspondingly affected by any condition 1997 chris horrocks introducing foucault page 67 the renaissance episteme

compathy definition in the cambridge english dictionary - May 12 2023
web us ˈkɑːm pə θi uk ˈkɒm pə θi the sharing of another person s feelings such as happiness sadness or pain to have empathy is to be able to put yourself in another s
znaczenie compathy definicja w cambridge english dictionary - Aug 03 2022
web compathy definicja 1 the sharing of another person s feelings such as happiness sadness or pain 2 the sharing of dowiedź się więcej
experiential learning in project management compathy method - Dec 27 2021
web the compathy method offers structured simulations role playing of real life scenarios providing an efficient platform for team members to reflect upon the emotional aspects of their colleagues beyond the reflection from colleagues the simulation work goes a stage further research shows that it gives the participants real life
compathy cambridge İngilizce sözlüğü ndeki anlamı - Jul 14 2023
web compathy anlam tanım compathy nedir 1 the sharing of another person s feelings such as happiness sadness or pain 2 the sharing of daha fazlasını öğren
compathy definition meaning merriam webster - Feb 09 2023
web compathy merriam webster com dictionary merriam webster merriam webster com dictionary compathy accessed 11 sep 2023
compathy every english word pronounced youtube - Mar 30 2022
web help us educate with a like subscribe and donation thank you patreon com seehearsaylearn youtube com c seehearsaylearn sub confirm
tureng compathy türkçe İngilizce sözlük - Jun 13 2023
web kelime ve terimleri çevir ve farklı aksanlarda sesli dinleme compathy başkası veya başkalarıyla paylaşılan sevinç veya keder duyguları ne demek türkçe İngilizce almanca İngilizce
difference between empathy sympathy and compathy youtube - Apr 30 2022
web praczo is a free language exchange community where you can connect chat and practice any language with native speakers from around the world download our ap
compathy english meaning cambridge dictionary - Aug 15 2023
web add to word list the sharing of another person s feelings such as happiness sadness or pain to have empathy is to be able to put yourself in another s shoes whereas to have
tureng compathy turkish english dictionary - Jan 08 2023
web english turkish online dictionary tureng translate words and terms with different pronunciation options compathy

başkası veya başkalarıyla paylaşılan sevinç veya keder duyguları

compathy definition and meaning collins english dictionary - Mar 10 2023

web 2 days ago compathy definition feelings as happiness or grief shared with another or others meaning pronunciation translations and examples

compathy meaning and definition of infoplease - Feb 26 2022

web atlas learn more about the world with our collection of regional and country maps

desiderium and more obscure feeling words merriam webster - Jul 02 2022

web desiderium definition an ardent desire or longing especially a feeling of loss or grief for something lost most of us are familiar with the word desire which in addition to a number of other things can mean something desired

compathy facebook - Jun 01 2022

web compathy 6 763 beğenme 2 kişi bunun hakkında konuşuyor □□□ □□□ □□□ □□□ □□□□ □□□ □□□ □□ □□□□ □□ □□□ □□□□ □□□ □□□ □ □□ □□□ □□ unique future modern

compathy definition meaning dictionary com - Apr 11 2023

web compathy definition feelings as happiness or grief shared with another or others see more